ENO-DIM

EnOcean Wireless LED Dimming Module

GREAlpha
LED Power Specialists

EnOcean Wireless Constant Voltage LED Dimming Module

GRE Alpha's EnOcean(R) dimming module allows for smooth, flicker-free dimming of lighting fixtures using any of EnOcean(R)'s certified Energy Harvesting Wireless Switches. GRE Alpha's series of dimming modules complies with the latest EnOcean(R) protocols and support frequencies for North America 902MHz, Japan 928 MHz, Europe and China 868MHz. The dimming module is compatible with any constant voltage LED driver and can be extended and allows for seamless integration into existing LED lighting systems or new building automation projects with ease.

Features

- Wireless dimming with integrated EnOcean module
- Works with any EnOcean compatible wireless dimmer
- 868 MHz (Europe, China), 902 MHz (USA, Canada), 928 MHz (Japan) versions available
- Wide range DC input
- Spring-loaded terminal for easy installation
- Up to 97% Efficiency
- 3 year warranty

Applications

- Architectural Lighting
- Effect & Contour Lighting
- Office General Illumination
- Warehouses
- Signage
- Strip Lighting
- Swimming Pools/Fountain lighting

Model	Input Voltage Range(Vdc)	Channel(s) Output	EnOcean Frequency (MHz)	Output Rating		Max Output Power (All Channels) (W)
				Voltage (VDC)	Max. Current (All Channels) (A)	
ENO-DIM-US	8 - 48	1	902	Vin - 0.3V	5	240
ENO-DIM-JP			928			
ENO-DIM-EU			868			

*- ENO-DIM dimming module requires an external CV LED driver, connected to the DC input, and should not exceed the above input voltage range.

* UL marking: for products manufactured in Vietnam only, effective October 2020.

Copyright © 2022 GRE Alpha. All rights reserved. Reproduction in whole or in part without permission is prohibited.

GREAlpha®
LED Power Specialists

Input Specification

Voltage Range	Please refer model table	Input Current	5.2A max (per channel)
Control	EnOcean Wireless Protocol	Control Range	0-100% ≤1V = 0% light output 10V =100% light output
Short Circuit Protection	Hiccup-Mode, Auto-Recovery upon removal of short circuit condition.	Over Voltage	Auto Recovery upon input voltage under Vin (max)
Over Temperature Protection	Auto recovery upon operating temperature <105°C	Under voltage Logout	Auto Recovery upon input voltage over Vin (min)
Max. no. of device ID stored into memory	30		

Output Specification

Output Frequency	1kHz PWM	Output Current	5A max. at full load **
Power Efficiency	97% Typ	Dimming Ratio	1:1000

** - ENO-DIM dimming module max. output current is dependent on LED driver output current , which should not exceed the Class 2 maximum of 5A or 100W per output channel.

Environmental Specification

Ambient Temperature	Storage Temp	Relative Humidity
- 20°C - 60°C (Full Load)	- 40°C - 85°C	5% - 93 %

Compliance / Safety

Wireless Standards:	EnOcean energy harvesting technology
Safety Standards:	UL 60730-1, CSA E60730-1
Purpose of Control:	Operating Control
Construction of control:	Independently Mounted for Panel Mounting
Action:	Type 1.Y
Pollution degree:	2
Impulse voltage:	330 V
ELV limits realized:	48 V

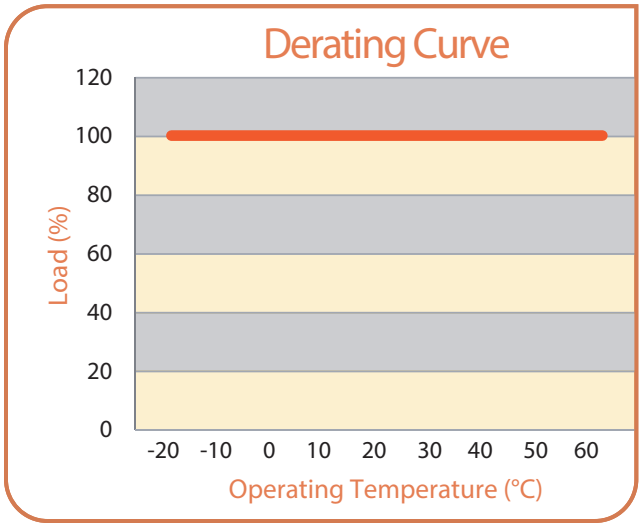

Mechanical Specification

Power Unit Dimensions	85.1mm (L) x35.9 mm (W) x 15.1mm (H)
Case Design/Material	Polycarbonate White
Connectors	Vin+, Vin-, LED+, LED-

Copyright © 2022 GRE Alpha. All rights reserved. Reproduction in whole or in part without permission is prohibited.

Mechanical Diagram

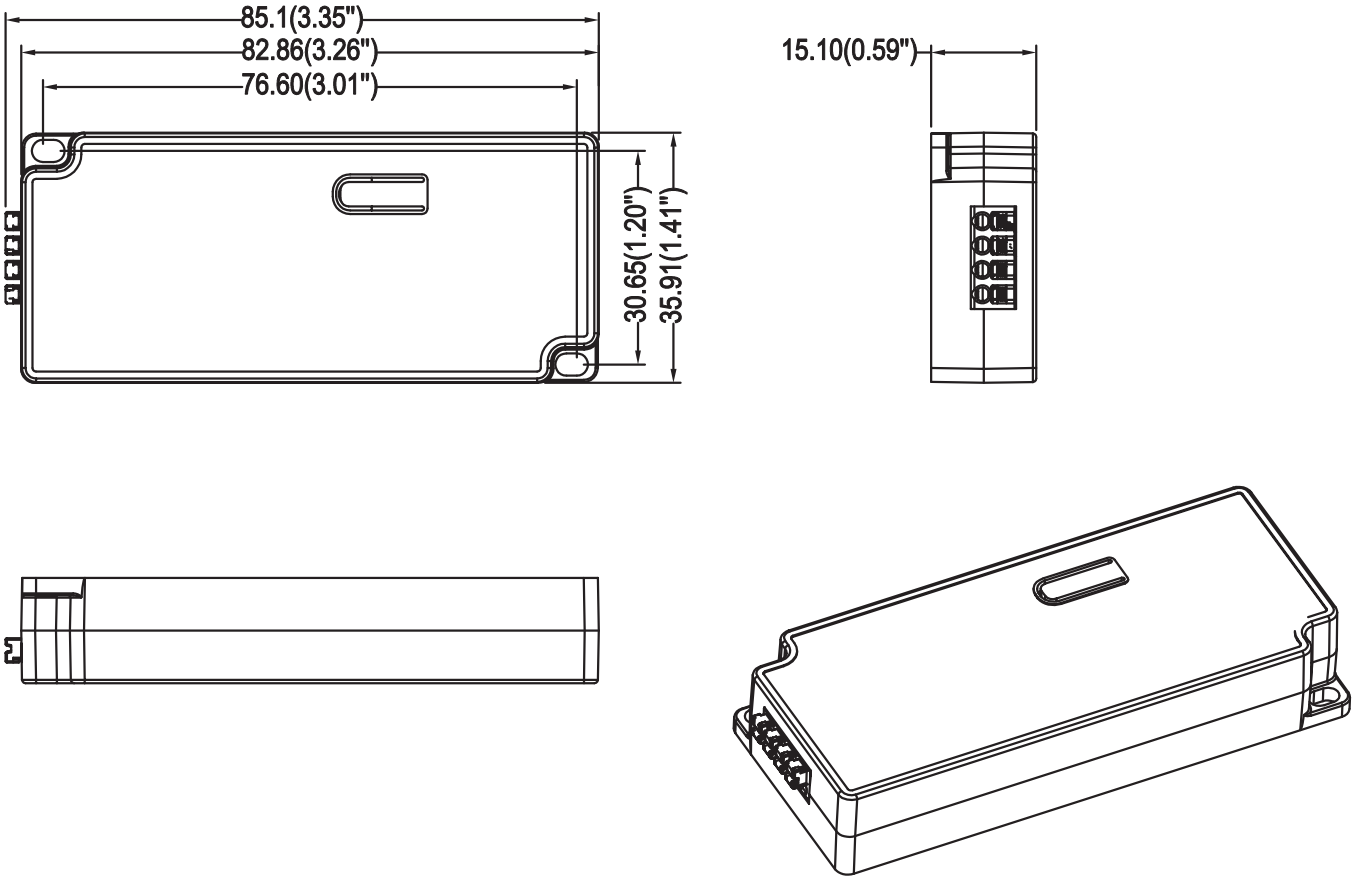

Packing Information:
Weight: 0.031kg/pc; 4.5kg/carton;
100pcs/carton; 212(L)*192(w)*220(H)mm

Copyright © 2022 GRE Alpha. All rights reserved. Reproduction in whole or in part without permission is prohibited.

Wiring Diagrams

ENO-DIM EnOcean Wireless Dimming Module

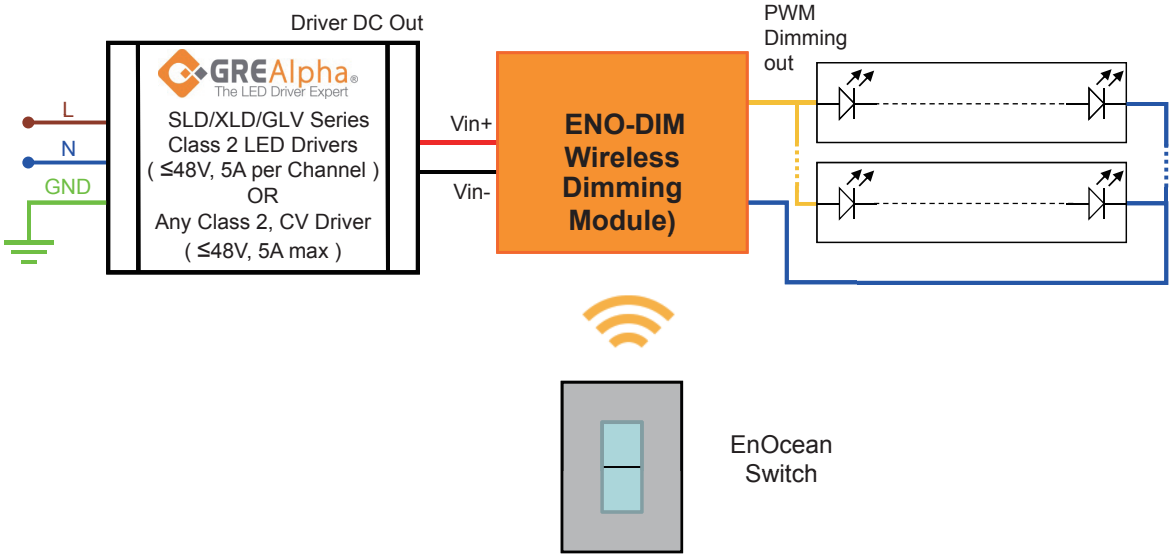

-* 0-100% flicker-free performance not guaranteed when used with non-GRE Alpha CV Drivers

Linking Instructions

1. Press the Link button for around 1 sec to enter into pairing mode
2. LED toggles between 0% and 50% brightness, at 1sec interval, for 30secs - Dimming module enters into linking mode
3. For linking with a switch/dimmer, follow the linking instructions from the switch/dimmer installation guide
4. If linking is successful, LED stays on at 90% brightness for 3 secs
5. Dimming module is now ready to link a new switch (steps 2 to 4 will be repeated)
6. Device returns to normal there is no operation for 30sec or the Link button is pressed again for 1 sec.
7. To unlink a linked switch/dimmer, repeat again the linking instructions from the switch/dimmer installation guide
8. If unlinking is successful, LED stays on at 10% brightness for 3 secs
9. To unlink all devices, press the Link button for approx. 10 secs

Troubleshooting

Problem	Solution
The ENO-DIM does not operate	Please ensure the ENO-DIM is installed and linked as per the wiring and linking instructions in this data sheet.
The ENO-DIM cannot be linked or respond to the switch/dimmer	Ensure the correct wireless standard is used (868MHz / 902MHz / 928MHz)

GRE Alpha undertakes extensive testing on its dimming modules to ensure dimming compatibility and performance to our best ability. However due to rapidly evolving technology and the wide number of dimmers available GRE Alpha makes no specific recommendations on dimming system selection for its dimming modules and there are no warranties of performance or compatibility implied. Please test product for dimming compatibility before use.

Information furnished is believed to be accurate and reliable. However, GRE Alpha assumes no responsibility for the consequences of use of such information nor for any infringement of patents or other rights of third parties which may result from its use. No license is granted by implication or otherwise under any patent or patent rights of GRE Alpha. Specifications mentioned in this publication are subject to change without notice. This publication supersedes and replaces all information previously supplied.
The GRE Alpha logo is a registered trademark of GRE Alpha Electronics Ltd.
All other names are the property of their respective owners
Copyright © 2022GRE Alpha. All rights reserved. Reproduction in whole or in part without permission is prohibited.